Expanding Your Solutions

Corporate Headquarters
13191 Crossroads Pkwy N., Ste 325
City of Industry, CA 91746
Phone: 800.775.2362
Fax: 626.330.7598
www.cemcosteel.com

Manufacturing Facilities
City of Industry, CA
Denver, CO
Ft. Worth, TX
Pittsburg, CA

Structural Engineering/Design
1001-A Pittsburgh Antioch Hwy
Pittsburg, CA 94565
Phone: 800.775.2362
Fax: 626.330.7598
www.cemcoengineering.com

Technical Services
13191 Crossroads Pkwy N., Ste 325
City of Industry, CA 91746
Phone: 800.416.2278
Fax: 626.249.5004

600VT250-33 VIPERTRACK

Geometric Properties

6" ViperTrack with 2-1/2" legs is manufactured from standard G40 hot-dipped galvanized steel. G60 and G90 coatings are available through special order, and may require up-charges and extended lead times.

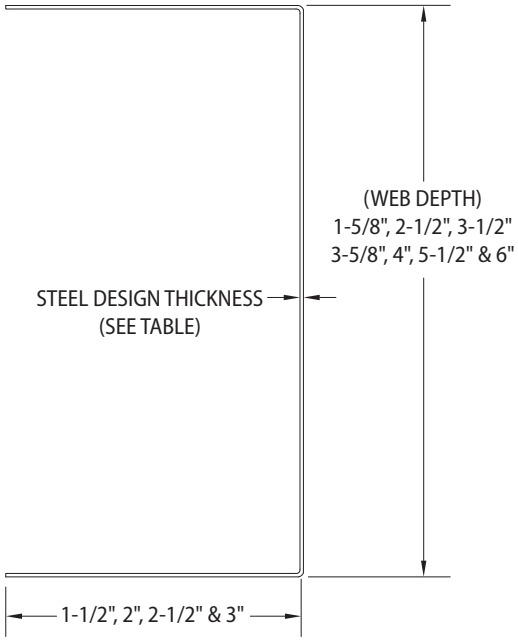

Physical Properties

Model No.	Design Thickness (in)	Minimum Thickness (in)	Yield (ksi)	Coating[3,4]	Web Depth (in)	Leg Size (in)	GAP[5] (in)	Load[5] (lb.)	Max Height[5] 5 psf, 16" o.c.
600VT250-33	0.0346	0.0329	33	G40	6	2-1/2	3/4	75	22'-7"

Notes:
1. Uncoated steel thickness. Thickness is for carbon sheet steel.
2. Minimum thickness represents 95% of the design thickness and is the minimum acceptable thickness.
3. Per ASTM C645 & A1003, Table 1.
4. G60 and G90 available upon request. Will require extended lead time and upcharge.
5. Use Gap, Load and Maximum Height data when member is used as a top deflection track.

Color Code (painted on ends): 33 mil: White

ASTM & Code Standards:

- ASTM A653/A653M, A924/A924M, A1003/A1003M, C645, C754, E119
- IBC: 2015, 2018, 2021
- CBC: 2016, 2019, 2022
- AISI: S100, S220

LEED v4 for Building and Design Construction

- MR Prerequisite: Construction and Demolition Waste Management Planning.
- MR Credit: Construction and Demolition Waste Management.
- MR Credit: Building Product Disclosure and Optimization – Sourcing of Raw Materials, Option 2.
- MR Credit: Building Product Disclosure and Optimization – Environmental Product Declarations, Options 1 & 2.
- MR Credit: Building Product Disclosure and Optimization – Material Ingredients, Option 1.
- MR Credit: Building Life-Cycle Impact Reduction, Option 4.

CEMCO cold-formed steel framing products contain 30% to 37% recycled steel.

- Total Recycled Content: 36.9%
- Post-Consumer: 19.8%
- Pre-Consumer: 14.4%

CSI Division: 09.22.16 – Non-Structural Metal Framing

ViperTrack 2.50" Leg

Member	Leg Size (in)	Weight (lb/ft)	Design (in)	Min (in)	Yield (ksi)	Gross Properties: Area (in^2)	Ix (in^4)	Sx (in^3)	Rx (in)	Iy (in^4)	Sy (in^3)	Ry (in)	Effective Properties: Ixd (in^4)	Sxe (in^3)	Ma (in-k)	Torsional Properties: Xo (in)	Jx1000 (in^4)	Cw (in)	Ro (in)	ß
600VT250-33	2.50	1.30	0.0346	0.0329	33	0.381	2.250	0.730	2.430	0.234	0.122	0.783	1.580	0.336	6.64	-1.44	0.1520	1.5500	2.93	0.759

Notes:
1. Section properties are in accordance with AISI S100-16/S2-20.
2. Cold-work of forming is not included.
3. The effective moment of inertia for deflection is calculated based on AISI S100-16/S2-20 procedure 1 for serviceability determination.
4. The center line bend radius is greater than 2 times the design thickness or 3/32".
5. Web-to-thickness ratio exceeds 200.
6. Web-to-thickness ratio exceeds 260.
7. Flange-width-to-thickness-ratio exceeds 60, only gross properties will be determined.

Check the updated list of Certified Production Facilities at Intertek's website at http://www.intertek.com/building/sfia

This technical information reflects the most current information available and supersedes any and all previous publications effective September 25, 2023.
09-25-23 AT