Expanding Your Solutions

Corporate Headquarters
13191 Crossroads Pkwy N., Ste 325
City of Industry, CA 91746
Phone: 800.775.2362
Fax: 626.330.7598

Manufacturing Facilities
City of Industry, CA
Denver, CO
Ft. Worth, TX
Pittsburg, CA

Structural Engineering/Design
1001-A Pittsburgh Antioch Hwy
Pittsburg, CA 94565
Phone: 800.775.2362
Fax: 626.330.7598

Technical Services
13191 Crossroads Pkwy N., Ste 325
City of Industry, CA 91746
Phone: 800.416.2278
Fax: 626.249.5004

#15 SOLID LEG CONTROL JOINT SPECIFICATION

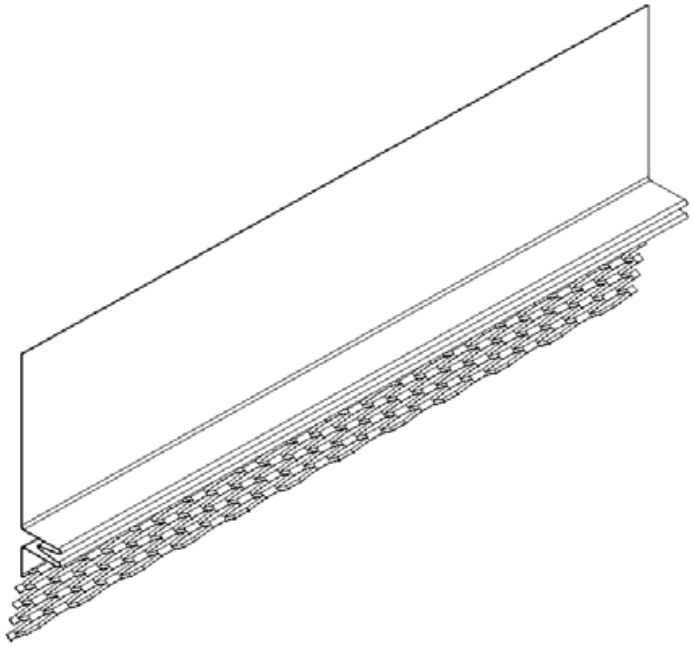

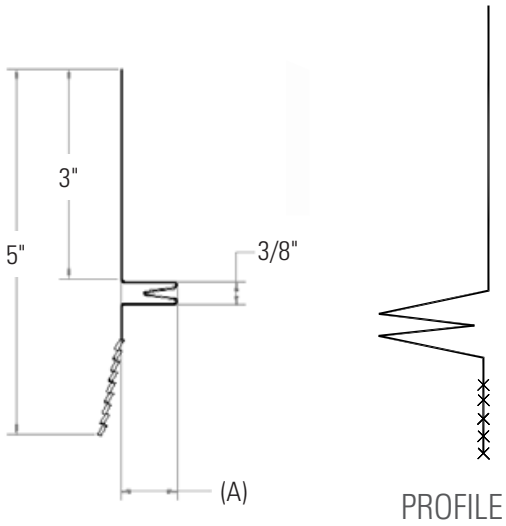

The **#15 SOLID LEG CONTROL JOINT** is manufactured for horizontal application on exterior plaster walls. The .30" gap in the V groove is designed to allow movement due to horizontal expansion and contraction of plastered walls. The 5" x 3/4" horizontal control joint has a 3" long upper solid flange that allows for water to weep out of the stucco cavity and a 1.5" long lower expanded metal flange that allows proper keying of plaster. The Control Joint is fabricated from minimum 0.018-inch thick hot-dipped galvanized steel complying with ASTM A653 having a minimum G90 coating complying with ASTM A924. **Water tested per ASTM E1105.**

Size	PCS/CTN	Length	FT/CTN	WT/Bundle	CTN/Pallet
3/4" (0.75")	15	10'	150	63 lbs.	40
7/8" (0.875")	15	10'	150	63 lbs.	40